IFSQUARE AFRICA

ENABLE THE MACHINE TO UNDERSTAND THE RESOURCE

THE BEST NUT X-RAY & SORTING TECHNOLOGY

Company Profile



www.ifsquareafrica.com

Index

About Us	p. 03
Industries	p. 03
Product | Valour 3	p. 05
Valour 3 Specifications	p. 06
Product | Valour 5	p. 07
Valour 5 Specifications	p. 08
Contact Us	p. 09



About Us

IFSQUARE AFRICA specializes in advanced X-ray inspection technology for agricultural products. Established in 2019 and headquartered in Hangzhou, China, we develop cutting-edge solutions that enhance quality control and efficiency in nut processing.

Our flagship Valor Series scanners, including the latest Valor 5, accurately detect internal defects such as insect damage, mold, and discoloration in in-shell nuts like macadamias, almonds, walnuts, and pecans. Designed for precision and automation, our technology helps processors reduce waste, improve productivity, and maintain superior quality standards.



Industries

Powering Quality Control Across Diverse Sectors

- Agriculture & Farming
- Nut Processing
- Safety & Quality Control
- Export & Import
- Supply Chain & Logistics
- Automation & Robotics



"Discover the advantages of our Valor series - precision, efficiency, and durability in every machine.


ALMONDS


MACADAMIAS


WALNUTS


PECAN NUTS

Products | Valour 3

Unmatched Sorting Performance for In-Shell Nuts

The Valor 3 offers the industry's leading sorting capabilities for in-shell macadamias and other nuts.
With advanced X-ray technology, it detects internal defects like insect bites, mold, and discoloration, ensuring only the highest quality nuts make it to market.

Easy to use, safe, and equipped with IoT connectivity for remote upgrades, the Valor 3 sets a new standard in agricultural sorting technology.



Macadamia sorting data:



Insect Bites
Tiny: 50%
Big: 80%
Many spots: >80%



Mold
60%-90%



Shrink
>95%



Core Red
60%-90%



Immature
70%-80%



Oil Spot
50%-70%

Raw (by weight)	ACC	GIB (after recycling)	Capacity
Below 3%	Below 0.6%	Below 3%	2-4 ton/hour
Below 7%	Below 1%	Below 3%	
7% - 10%	Below 1.3%	Below 3%	

Valour 3 | Specifications

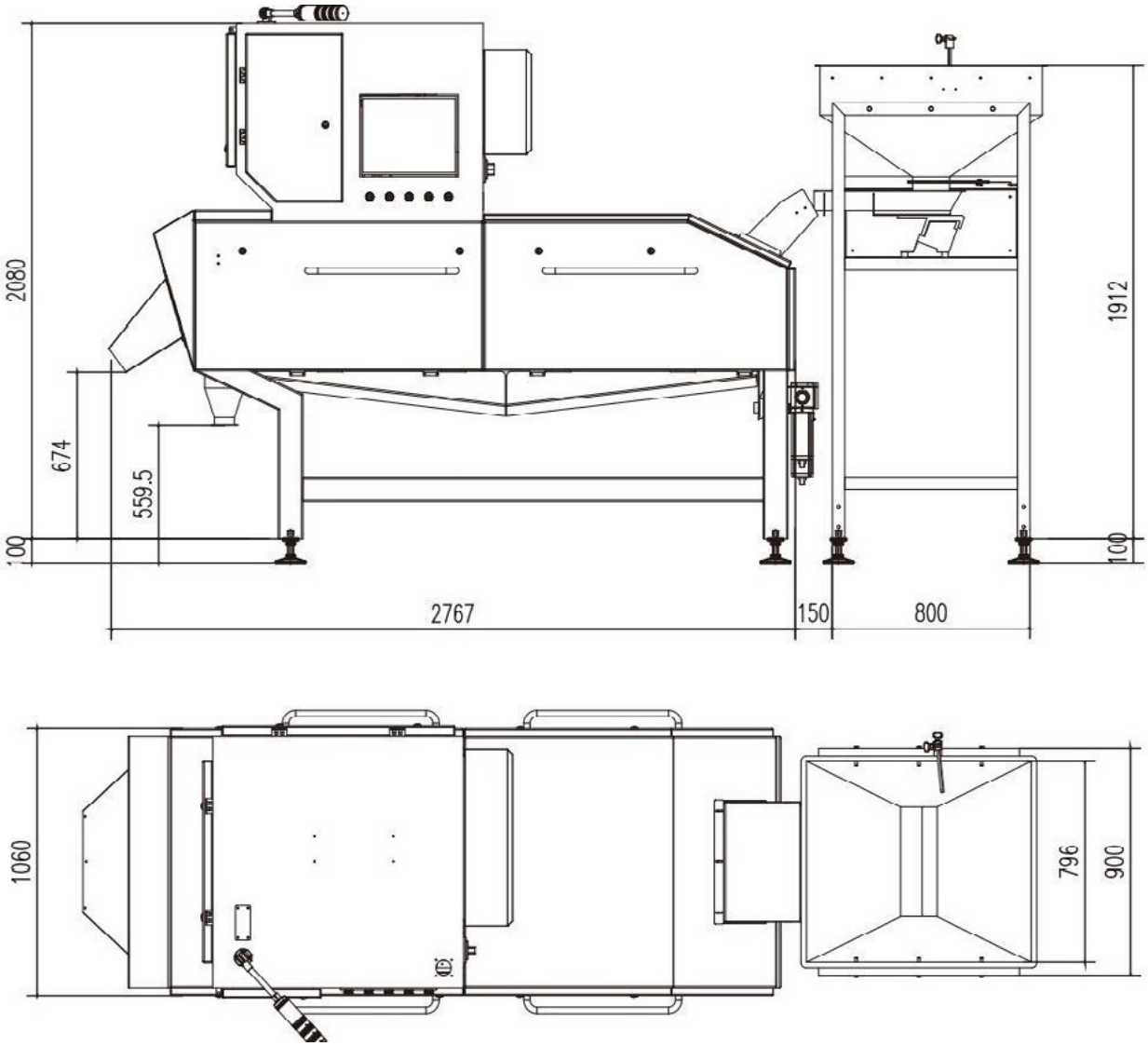

Production capacity:	2-4ton/hour
Host machine:	2 880 x 2 250 x 1 100mm
Vibration table:	940 x 910 x 2 020mm
Gas consumption:	0.6Mpa
Power consumption:	4.5Kw

Products | Valour 5

Next-Level Sorting for Larger Volumes

Designed for high-capacity sorting, the Valor 5 delivers exceptional accuracy with it's advanced detection system. This machine is also capable to do optical sorting as an advanced added option if needed.

Capable of processing up to 8 tons per hour, it's ideal for businesses looking to scale operations while maintaining superior quality control.

With an intuitive interface and cloud-based support, the Valor 5 makes precision sorting faster, safer, and more efficient than ever.



Macadamia sorting data:



Insect Bites
85% - 95%



Immature & Shrink
90% - 95%

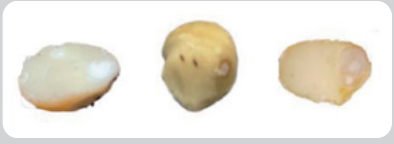

White & Oil Spot
80% - 90%



Brown Center
Left: 90%
Right: 50% - 70%



Mold
80% - 95%
depending on the level of mold

Key Features:

- **High Precision Sorting**
- **Easy-to-Use Interface**
- **Remote Monitoring & Maintenance**
- **Ultra-Low X-Ray Leakage**
- **Increased Productivity & Efficiency**
- **Robust & Durable Build**

Valour 5 | Specifications

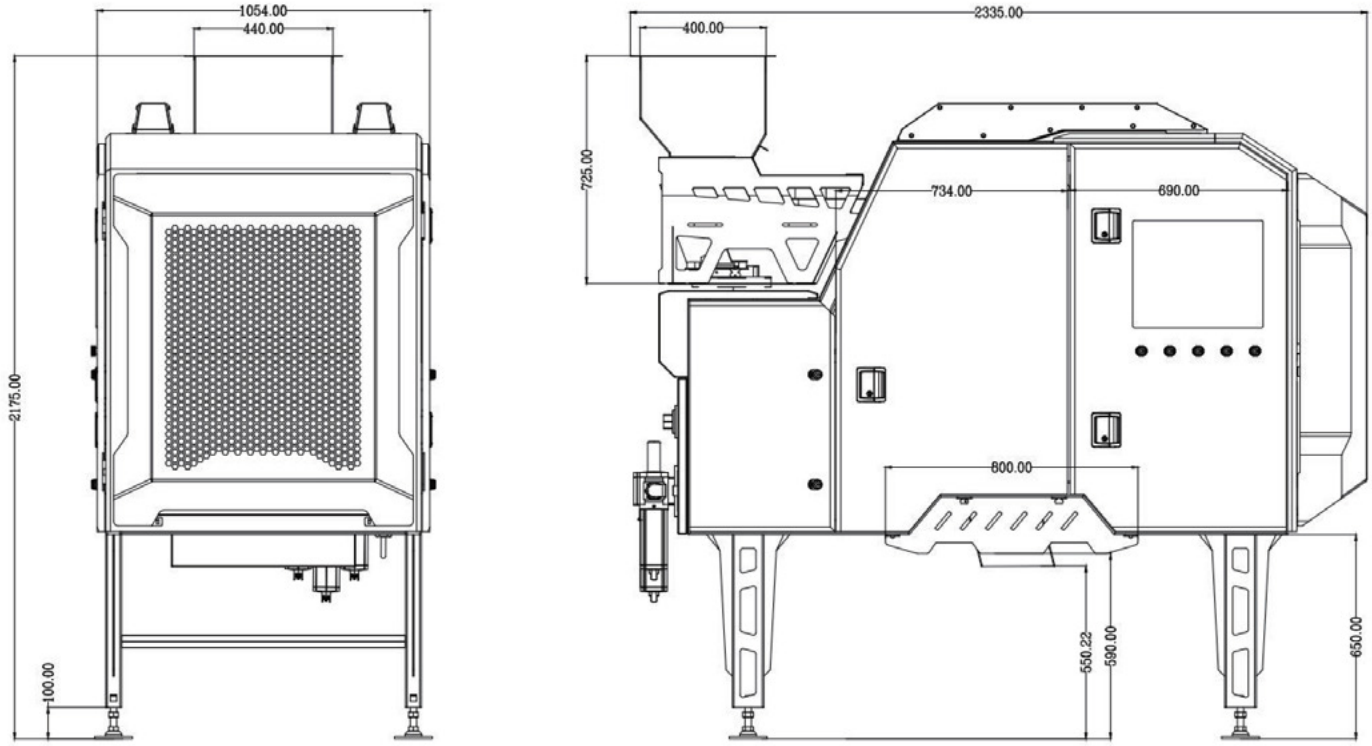

X-ray tube	320w
X-ray detector	0.4mm
Maximum detection width	500mm
Maximum detection height	50mm
Working environment	Temperature -20°C ~ 45°C, humidity<90%
X-ray leakage	<0.2usv/h undercovered
Screen	17 inch
Rejecter	96
Production capacity	5-8 ton/hour
Machine material	SUS 304 (3mm thickness)
Sorter size	2 350 x 2 200 x 1 100mm
Infeed hopper size	800 x 730 x 730mm
Air pressure	0.6Mpa
Power consumption	5.5Kw
Power supply	220vac 50hz
IP level	IP55
Machine condition	New

Contact Us

TOBIE DE BEER

Director

+27 72 857 7756

tobie@ifsquareafrica.com

CLIFFIE COLYN

Director

+27 84 870 7349

cliffie@ifsquareafrica.com

ULRICH DE BEER

Sales & Operations

+27 71 676 7659

ulrich@ifsquareafrica.com

14 Suikerriet Street, 25B Labserve Ave, Nebo Park, Mbombela, 1200

www.ifsquareafrica.com